UNIVERSITY OF CAMBRIDGE INTERNATIONAL EXAMINATIONS
International General Certificate of Secondary Education

CANDIDATE NAME	

CENTRE NUMBER						CANDIDATE NUMBER					

3735851861

PHYSICS **0625/02**

Paper 2 Core **October/November 2009**

1 hour 15 minutes

Candidates answer on the Question Paper.

No Additional Materials are required.

READ THESE INSTRUCTIONS FIRST

Write your Centre number, candidate number and name on all the work you hand in.
Write in dark blue or black pen.
You may use a soft pencil for any diagrams, graphs or rough working.
Do not use staples, paper clips, highlighters, glue or correction fluid.
DO **NOT** WRITE IN ANY BARCODES.

Answer **all** questions.
You may lose marks if you do not show your working or if you do not use appropriate units.
Take the weight of 1 kg to be 10 N (i.e. acceleration of free fall = 10 m/s^2).

At the end of the examination, fasten all your work securely together.
The number of marks is given in brackets [ ] at the end of each question or part question.

This document consists of **19** printed pages and **1** blank page.

DCA (SHW 00151 2/08) 12741/5
© UCLES 2009

UNIVERSITY of CAMBRIDGE International Examinations

www.root19.com +91 - 9969 353 391

For Examiner's Use

1 Fig. 1.1 shows a measuring cylinder containing some water.

A student allows 200 drops of water to fall into the water in the measuring cylinder. Fig. 1.2 shows the measuring cylinder after the addition of the drops.

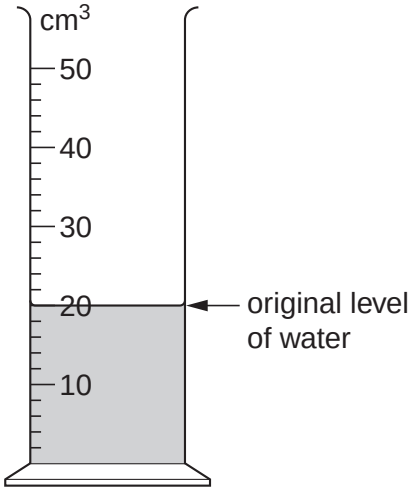

Fig. 1.1

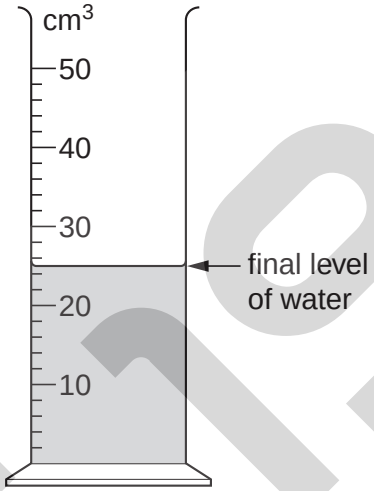

Fig. 1.2

(a) State

(i) the original volume of water in the cylinder,

..... cm^3

(ii) the final volume of water in the cylinder.

..... cm^3
[1]

(b) Calculate the volume of water added.

volume added = ... cm^3 [1]

(c) Calculate the average volume of one of the drops of water.

average volume = ... cm^3 [2]

[Total: 4]

© UCLES 2009
www.root19.com

+91 - 9969 353 391

For Examiner's Use

2 As a pole vaulter runs towards the jump, his pole is straight. When he is jumping, the pole is bent, as illustrated in Fig. 2.1.

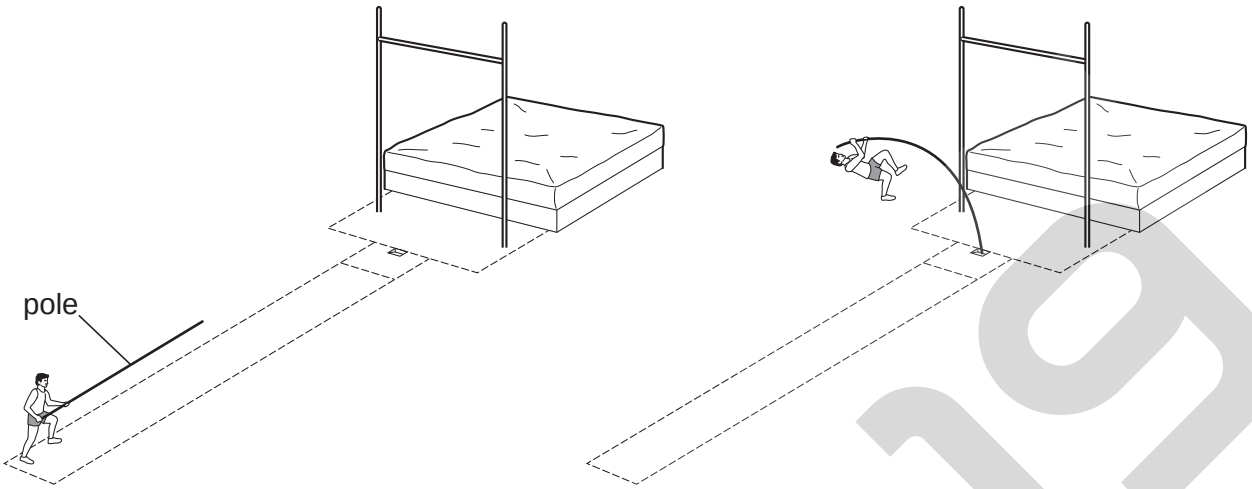

Fig. 2.1

(a) Which form of energy of the athlete increases as he accelerates towards the jump?

..... [1]

(b) Which form of energy is stored in the pole because it is bent?

..... [1]

(c) Which form of energy of the athlete increases because he is rising towards the bar?

..... [1]

(d) Which two quantities need to be known in order to calculate how much work is done lifting the athlete up from the ground to the bar?

..... and ..... [1]

[Total: 4]

© UCLES 2009
www.root19.com

+91 - 9969 353 301

For Examiner's Use

3 Fig. 3.1 shows the distance/time graph for a girl's bicycle ride and the axes for the corresponding speed/time graph.

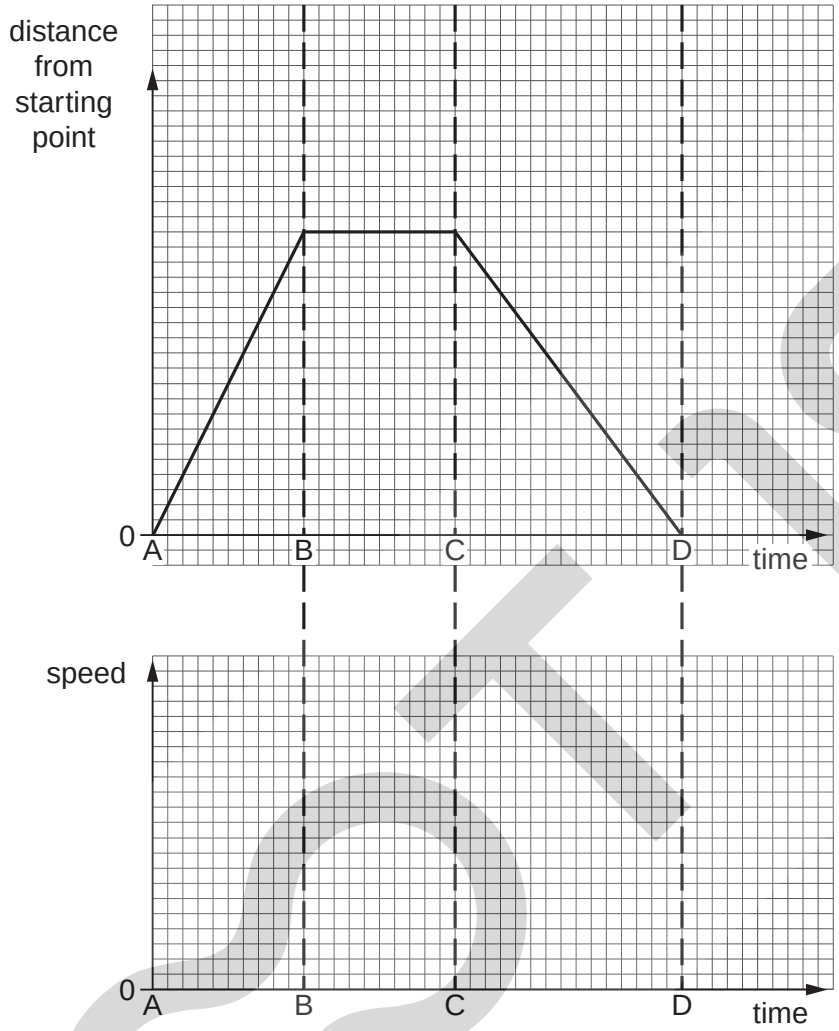

Fig. 3.1

(a) Look at the distance/time graph that has been drawn for you.

(i) Answer the following questions for the time interval AB.

1. What is happening to the distance from the starting point?

.....

..... [2]

2. What can you say about the speed of the bicycle?

..... [1]

© UCLES 2009
www.root19.com

+91 - 9969 353 391

For Examiner's Use

(ii) On the speed/time axes in the lower part of Fig. 3.1, draw a **thick** line that could show the speed during AB. [1]

(b) On the speed/time axes of Fig. 3.1

(i) draw a **thick** line that could show the speed during BC, [1]

(ii) draw a **thick** line that could show the speed during CD. [2]

(c) How far from her starting point is the girl when she has finished her ride?

distance from starting point = ... [1]

[Total: 8]

© UCLES 2009
www.root19.com

+91 - 9969 353 301

For Examiner's Use

4 **(a)** The object illustrated in Fig. 4.1 is not in equilibrium. It has a weight of 12 N.

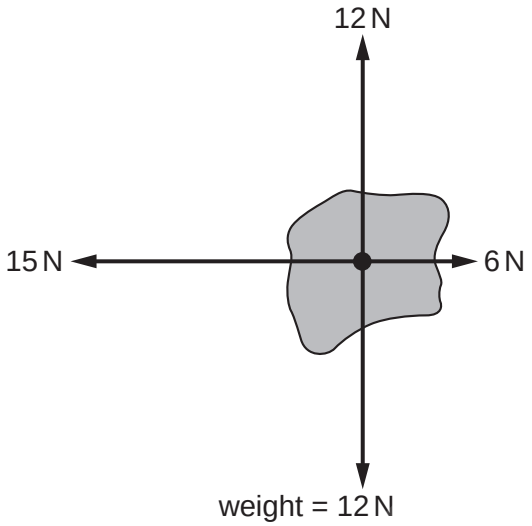

Fig. 4.1

(i) State what happens to the object.

.....

..... [2]

(ii) On Fig. 4.1, draw an arrow to show the extra force necessary to bring the object to a state of equilibrium. Label the arrow with the size of the force. [2]

(iii) On Fig. 4.1, show where the centre of mass of the object is situated, using the letter G. [1]

© UCLES 2009
www.root19.com

+91 - 9969 353 391

For Examiner's Use

(b) Fig. 4.2 shows a car transporter, first unloaded and then loaded with two cars on the upper deck.

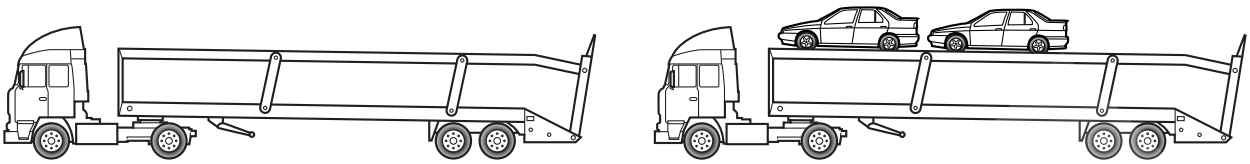

Fig. 4.2

(i) What happens to the centre of mass of the transporter and its load when the cars are loaded?

Tick one box.

rises ☐

stays at the same height ☐

falls ☐

[1]

(ii) How do the two loaded cars affect the stability of the transporter?

Tick one box.

more stable ☐

no effect ☐

less stable ☐

[1]

[Total: 7]

© UCLES 2009
www.root19.com

+91 - 9969 353 301

For Examiner's Use

5 **(a)** Fig. 5.1 shows the cooling curve for a pure substance. The substance is liquid at A.

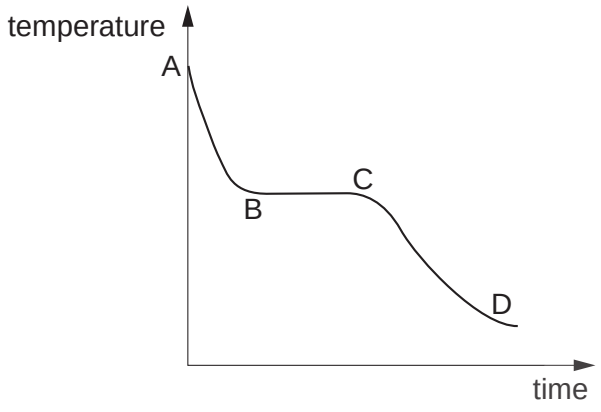

Fig. 5.1

(i) Describe what is happening to the substance between

1. A and B, ...

2. B and C, ...

3. C and D. .....

[3]

(ii) During which of the sections of the graph is energy being lost from the substance to the surroundings? Put a tick in any of the boxes to indicate where this is happening.

between A and B ☐

between B and C ☐

between C and D ☐

[2]

(iii) What is the state of the substance at D?

..... [1]

www.root19.com +91 - 9969 353 391

For Examiner's Use

(b) When the temperature reaches that at D, the substance is then heated steadily until it again reaches the temperature it had at A.

On the axes of Fig. 5.2, sketch a graph of temperature against time for the heating of the substance. [2]

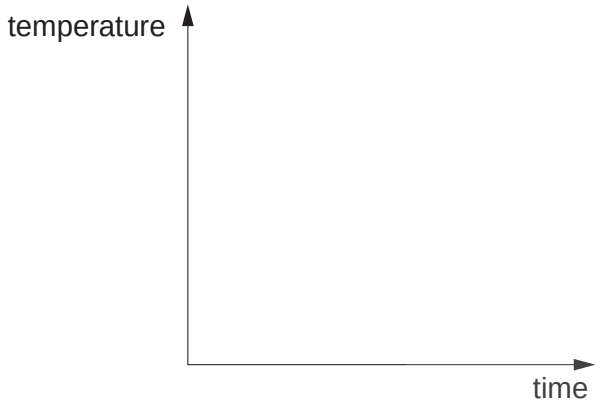

Fig. 5.2

[Total: 8]

© UCLES 2009

www.root19.com
+91 - 9969 353 301

For Examiner's Use

6 A bicycle pump has its outlet sealed with a tight rubber bung, as shown in Fig. 6.1.

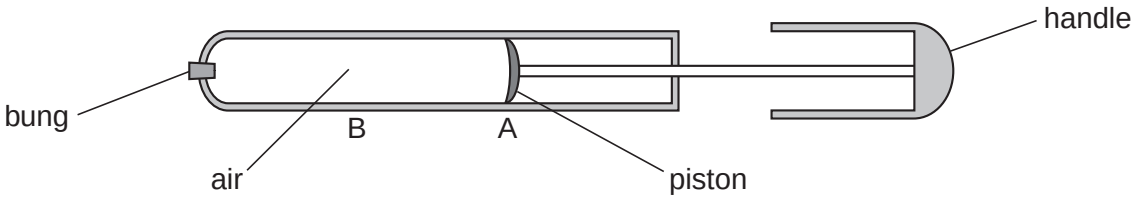

Fig. 6.1

(a) The temperature of the air in the pump is kept constant. The handle of the pump is pushed in so that the piston moves from A to B.

Tick the correct box in each row of the table below to show how each quantity varies as the piston is moved.

	greater with piston at A	greater with piston at B	same with piston at A or B
the average speed of the air molecules			
the frequency with which the air molecules hit the walls and the piston			
the pressure of the air in the pump			

[3]

(b) When the handle is pushed in even further, the rubber bung pops out of the hole.

Which two forces are equal just before the bung pops out? Tick **two** boxes.

- friction force between bung and hole ☐
- resultant due to forces of air on each side of piston ☐
- resultant due to forces of air on each side of bung ☐
- gravitational force on bung ☐
- force of air on walls ☐

[2]

[Total: 5]

© UCLES 2009
www.root19.com

+91 - 9969 353 391

For Examiner's Use

7 Fig. 7.1 shows an experiment in which an image is being formed on a card by a lens and a plane mirror.

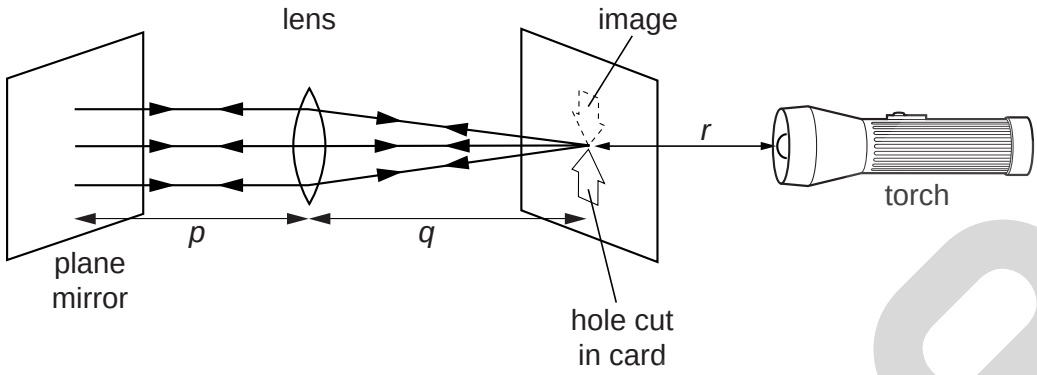

Fig. 7.1

The card and the mirror are shown angled, so that you can see what is happening. In a real experiment they are each roughly perpendicular to the line joining the torch bulb and the centre of the lens.

(a) State which of the three marked distances, *p*, *q* and *r*, is the focal length of the lens.

..... [1]

(b) On Fig. 7.1 clearly mark a principal focus of the lens, using the letter F. [1]

(c) Tick the boxes alongside two features that describe the image formed on the card.

erect ☐

inverted ☐

real ☐

virtual ☐ [2]

(d) What can be said about the size of the image, compared with the size of the object?

..... [1]

(e) In the experiment, the plane mirror is perpendicular to the beam of light.

State what, if anything, happens to the image on the card if

(i) the plane mirror is moved slightly to the left,

..... [1]

(ii) the lens is moved slightly to the left.

..... [1]

[Total: 7]

For Examiner's Use

8 Fig. 8.1 shows a student standing midway between a bell tower and a steep mountainside.

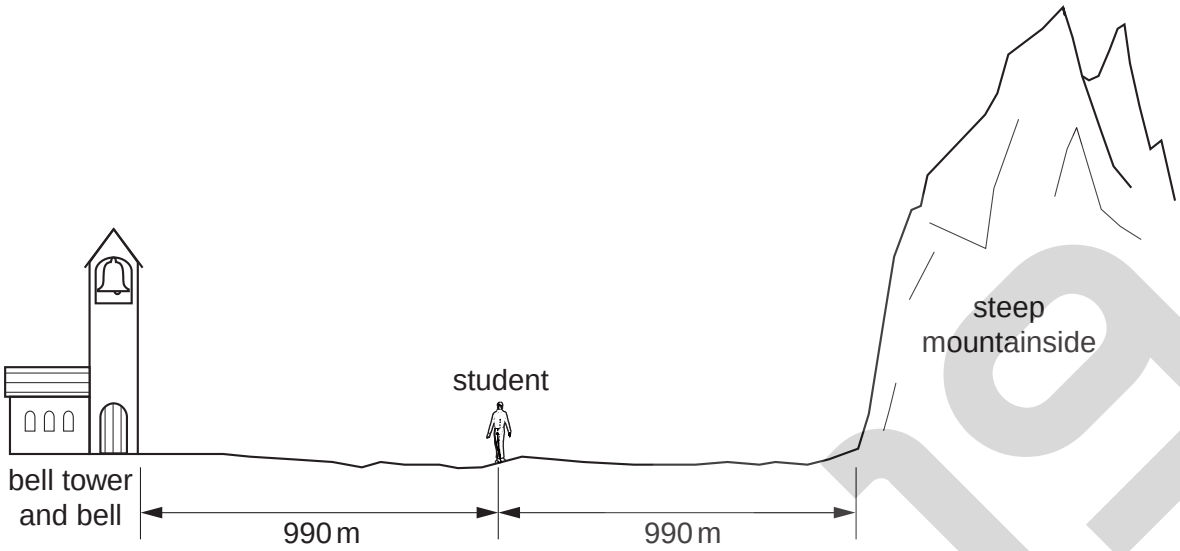

Fig. 8.1

The bell rings once, but the student hears two rings separated by a short time interval.

(a) Explain why the student hears two rings.

.....

.....

..... [2]

(b) State which of the sounds is loudest, and why.

.....

.....

..... [2]

© UCLES 2009
www.root19.com

+91 - 9969 353 391

For Examiner's Use

(c) Sound in that region travels at 330 m / s.

(i) Calculate the time interval between the bell ringing and the student hearing it for the **first** time.

time interval = ... s [2]

(ii) Calculate the time interval between the bell ringing and the student hearing it for the **second** time.

time interval = ... s [1]

(iii) Calculate the time interval between the two sounds.

time interval = ... s [1]

[Total: 8]

© UCLES 2009
www.root19.com

+91 - 9969 353 301

For Examiner's Use

9 **(a)** The two circuits shown in Fig. 9.1 each contain two resistors and a battery.

Complete the statement under each circuit.

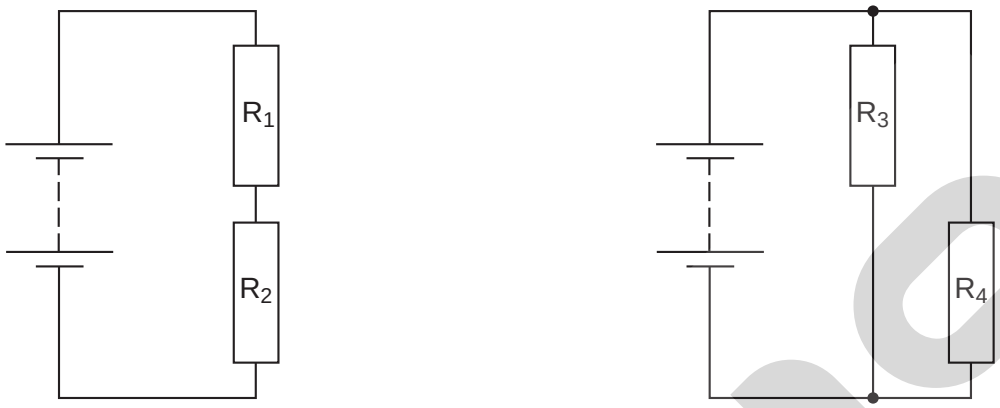

Resistors R_1 and R_2 are connected in ……

Resistors R_3 and R_4 are connected in …… [1]

Fig. 9.1

(b) A student connects the circuit shown in Fig. 9.2. The resistance of the 12V battery is so low that it can be ignored.

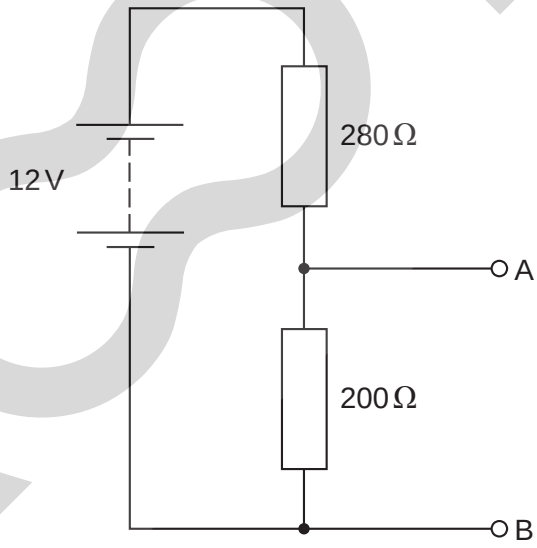

Fig. 9.2

(i) Calculate the total resistance in the circuit.

resistance = ... Ω [2]

www.root19.com +91 - 9969 353 391

For Examiner's Use

(ii) Calculate the current delivered by the battery.

current = ... [4]

(iii) Calculate the potential difference (p.d.) across the 200 Ω resistor.

p.d. = ... V [2]

(iv) Describe how the student could check whether the p.d. across the 200 Ω resistor is the same as you have calculated. Include the name of the instrument he would use for this.

.....

.....

..... [2]

[Total: 11]

© UCLES 2009
www.root19.com

+91 - 9969 353 301

For Examiner's Use

10 Fig. 10.1 is a diagram of a transformer.

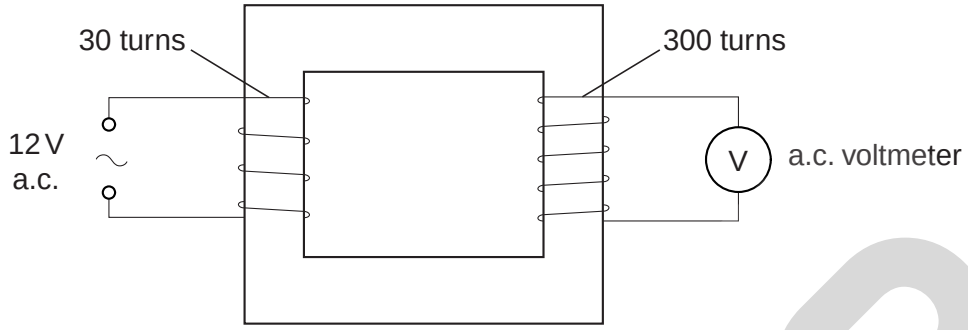

Fig. 10.1

(a) **(i)** On Fig. 10.1, clearly label the core of the transformer. [1]

(ii) Name a suitable material from which the core could be made.

..... [1]

(iii) State the purpose of the core.

..... [1]

(b) Calculate the reading on the voltmeter.

voltmeter reading = ... V [3]

[Total: 6]

www.root19.com +91 - 9969 353 391

For Examiner's Use

11 A woodworker buys an old electric drill that has been used before. The drill is illustrated in Fig. 11.1.

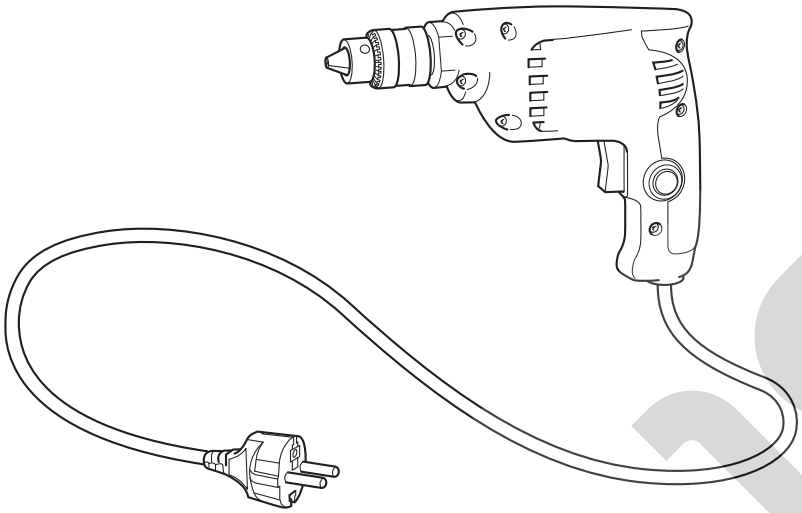

Fig. 11.1

The drill mechanism itself is guaranteed to be electrically safe.

Suggest three checks the woodworker could make in order to ensure that the rest of his purchase is electrically safe.

1. .....

.....

2. .....

.....

3. .....

..... [3]

[Total: 3]

www.root19.com +91 - 9969 38 38 01

For Examiner's Use

12 A radioactive material, *X*, has a half-life of 2 minutes.

At the beginning of an experiment, a sample of the material produces a count-rate of 800 counts / s.

Fig. 12.1 shows the count-rate readings at the start of the experiment and after one half-life has elapsed.

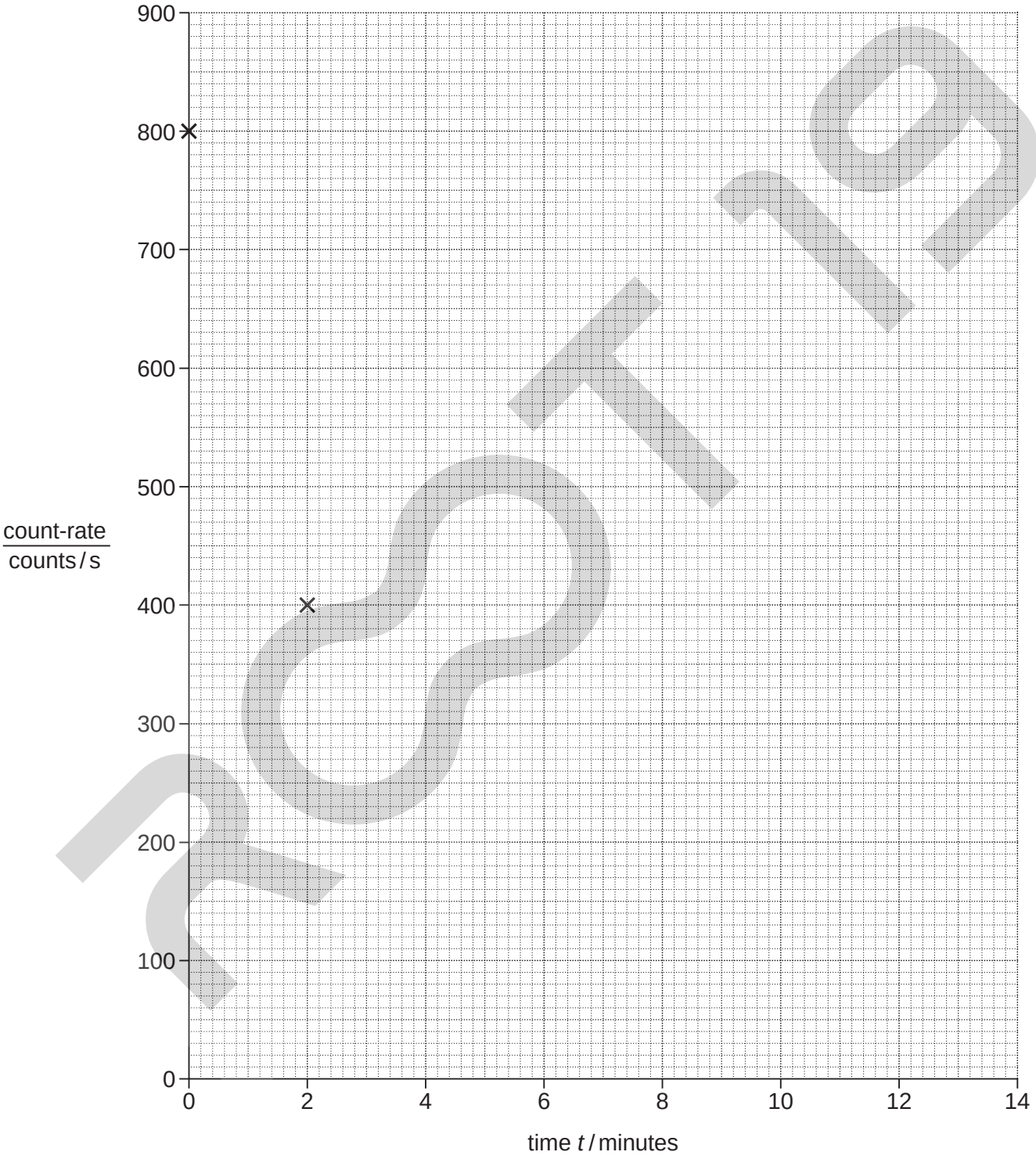

Fig. 12.1

For Examiner's Use

(a) Complete the plot of the decay curve, for times up to t = 12 minutes. Draw the best curve through your points. [3]

(b) From your graph find

(i) the count-rate from the sample after 9 minutes,

count-rate = ... counts/s [1]

(ii) the time it takes for the count-rate to fall from 700 counts/s to 350 counts/s.

time = ... minutes [1]

(c) A second sample of this radioactive material *X* gives an initial count-rate of 400 counts/s.

What will be the half-life of this sample?

half-life = ... minutes [1]

(d) A river contains fine particles of mud. The mud builds up on the bottom of the river and prevents the movement of large ships. To solve this problem, the authorities remove the mud and dump it at sea. To check where the mud goes after it is dumped, a radioactive material is mixed with it and tracked with radioactivity detectors.

(i) Explain why the radioactive material *X* is not suitable to trace the movement of the dumped mud.

.....

..... [1]

(ii) State two other properties that a radioactive material must have to make it suitable for tracking the mud.

1. .....

2. ..... [2]

[Total: 9]

© UCLES 2009
www.root19.com

+91 - 9969 353 391

BLANK PAGE

Permission to reproduce items where third-party owned material protected by copyright is included has been sought and cleared where possible. Every reasonable effort has been made by the publisher (UCLES) to trace copyright holders, but if any items requiring clearance have unwittingly been included, the publisher will be pleased to make amends at the earliest possible opportunity.

University of Cambridge International Examinations is part of the Cambridge Assessment Group. Cambridge Assessment is the brand name of University of Cambridge Local Examinations Syndicate (UCLES), which is itself a department of the University of Cambridge.